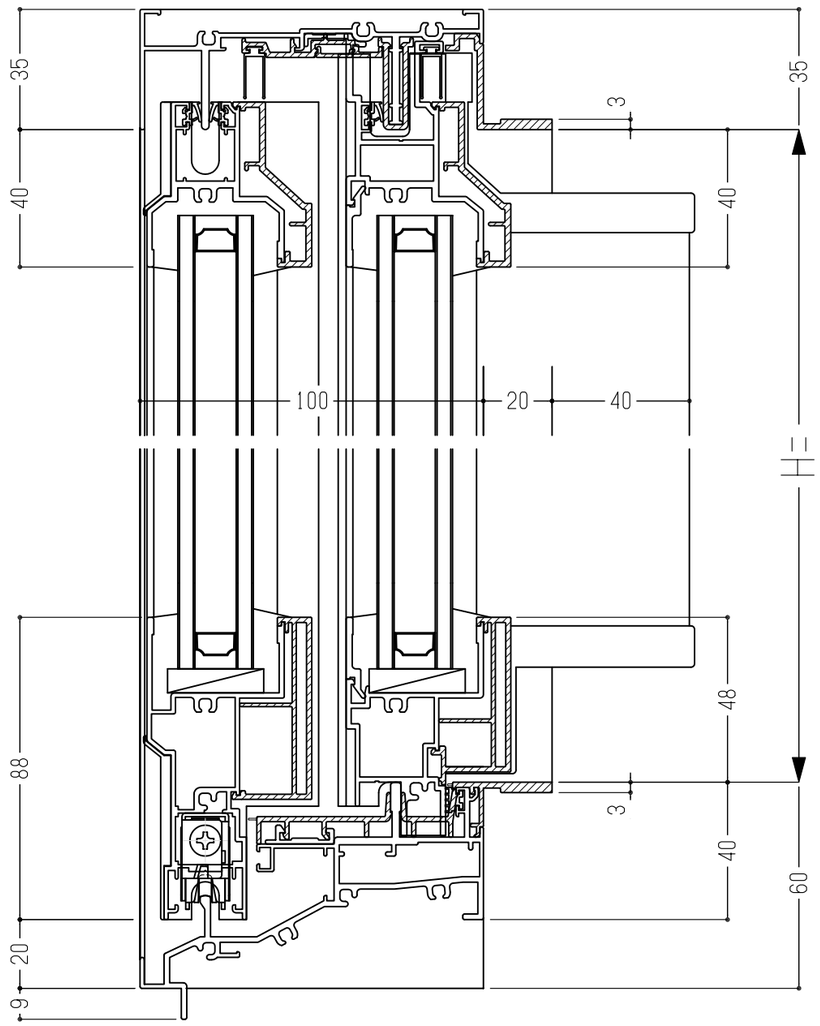
35
40
3
35
40
100
20
40
H=
48
88
3
40
60
20
9

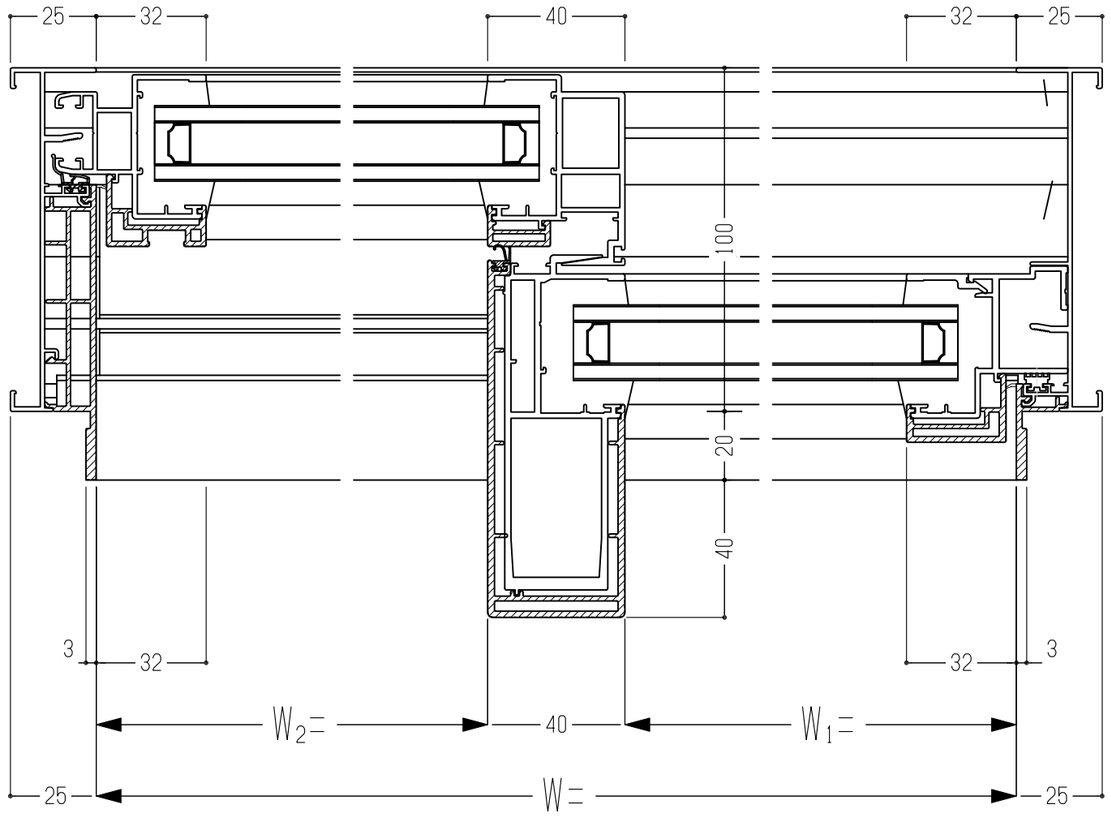
25
32
40
32
25
100
20
40
3
32
32
3
W2=
40
W1=
25
W=
25